Manganese Dioxide Lithium Battery

CR2450(610mAh)

maxell

Diagrams of Batteries with Terminals

Horizontal & Through hole Type

● **External Dimensions (unit: mm)**

CR2450

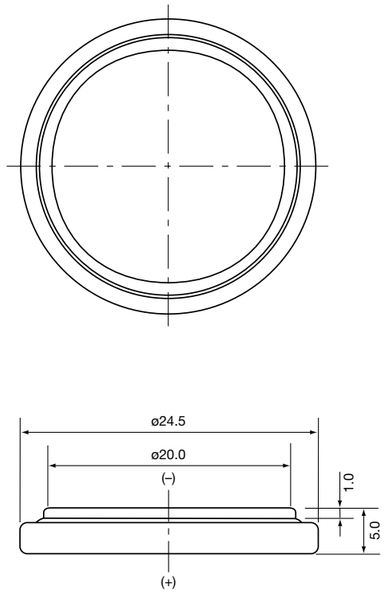

CR2450T25S

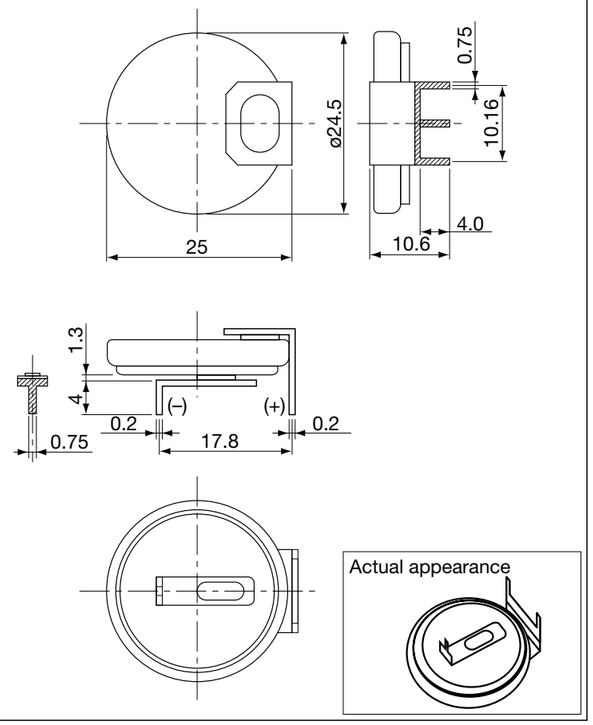

Tin plating